ISO 9001 國際品質認證
ISO 9001 CERTIFICATE

松暉電機工業股份有限公司
SONG HUEI ELECTRIC CO., LTD.
佛山市松暉電機科技有限公司
FOSHAN SONG HUEI ELECTRIC CO., LTD.

| 一般事項 General | |
|---|---|
| 使用溫度範圍<br>Operating temperature | -10 ℃ ~ +70 ℃ |
| 手工焊接<br>Manual soldering | 300 ℃ max 3 sec |
| 電氣特性 Electrical Characteristics | |
| 總阻值 (R)<br>Total resistance | 500 Ω ~ 1 MΩ |
| 總阻值容許誤差<br>Total resistance tolerance | ± 20 % (Lesss than 500 Ω and More than 1 MΩ ± 30 % ) |
| 阻值線性<br>Resistance taper | ☐ A ☐ B ☐ C ☐ W |
| 摺動雜音<br>Sliding noise | Less than 100 mV |
| 殘留阻值<br>Residual resistance | Less than 20 Ω |
| 定格電力<br>Rated power (W) | 0.03 W |
| 額定電壓<br>Rated voltage (V) | $E=\sqrt{P*R}$<br>E：Rated voltage 額定電壓 (V)<br>P：Power rating 額定電力 (W)<br>R：Nominal total resistance 公稱全阻抗值 (Ω)<br>當額定電壓超過最高使用電壓的時候，最高使用電壓即為額定電壓。<br>When the rated voltage exceeds the maximum operating voltage,the maximum operating voltage shall be the rated voltage. |
| 最高使用電壓<br>Max operating voltage | AC 50 V / DC 12 V |
| 絕緣阻抗<br>Insulation resistance | More than 100 MΩ at DC 100 V |
| 耐電壓<br>Withstand voltage | 1 minute at AC 100 V |
| 相互偏差<br>Gang error | R ≤ 1 KΩ：-30 dB ~ 0 dB ≤ 3 dB<br>R ＞ 1 KΩ：-40 dB ~ 0 dB ≤ 3 dB |
| 機械特性 Mechanical Characteristics | |
| 全回轉角度<br>Total rotational angle | 270 ° ± 10 ° |
| 全回扭力<br>Rotational torque | 20 ~ 100 gf.cm |
| 全回轉止強度<br>Rotational stopper strength | 0.8 Kgf.cm max |
| 軸推拉強度<br>Shaft push-pull strength | Push force：0.5 Kgf max<br>Pull force：0.2 Kgf max |
| 回轉壽命<br>Rotational life | 10,000 cycles |

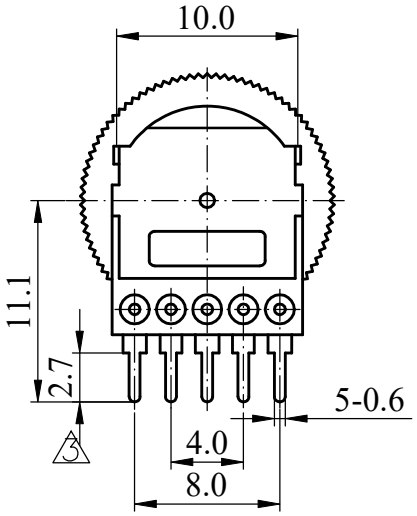


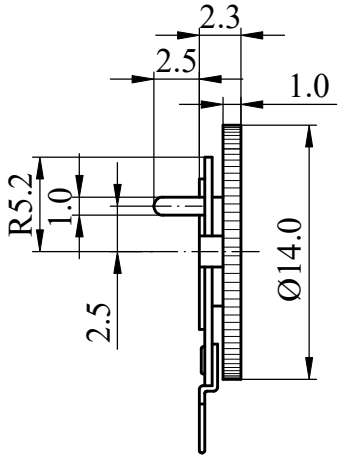


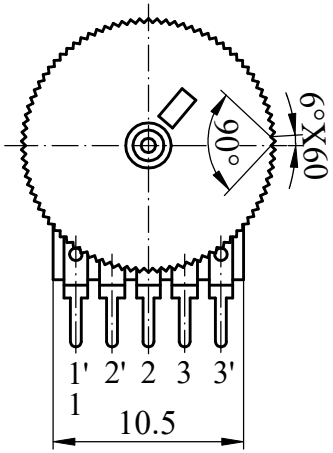


FULL C.C.W POSITION

Mounting Hole

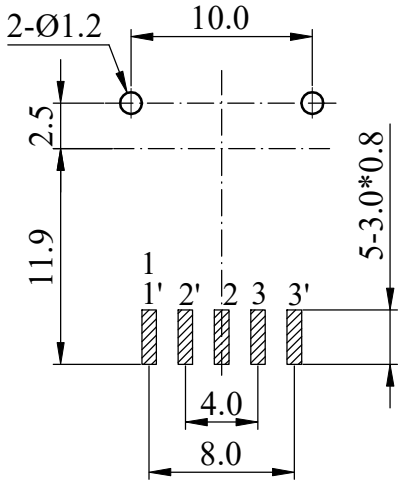


CIRCUIT

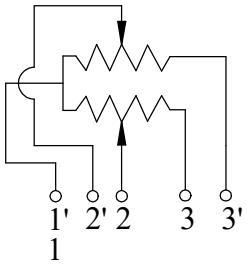


| Non notation tolerance | |
|---|---|
| < 10 | ±0.3 |
| 10 ~ 100 | ±0.5 |
| > 100 | ±0.8 |

SONG HUEI ELECTRIC CO., LTD.
FOSHAN SONG HUEI ELECTRIC CO., LTD.

MODEL: R1001G22A1/14*1

| Approval | Checked | Projected |
|---|---|---|
| R&D 2018-12-19 藍濬毅 | 廠長 2018-12-19 鄧記穩 | R&D 2018-12-19 何鴻根 |

| | | | |
|---|---|---|---|
| UNIT | mm | SCALE | 2:1 |
| VERSION | 1.3 | DATE | 2010.11.02 |
| DRAWING NO. | R10G-011 | | |

| ISSUE | SUBJECT | NAME | DATE |
|---|---|---|---|
| 4 | | | |
| 3 | 整理图元 | 何鸿根 | 2018.12.19 |
| 2 | 原2改2.7 | 何鸿根 | 2017.11.08 |
| 1 | 添加电路图 | 甘锡炼 | 2010-11-02 |

RECORD

# Type of Knob 旋鈕形式:

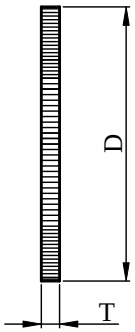


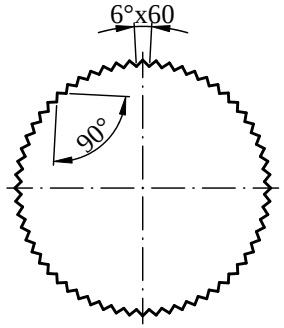


Ø14

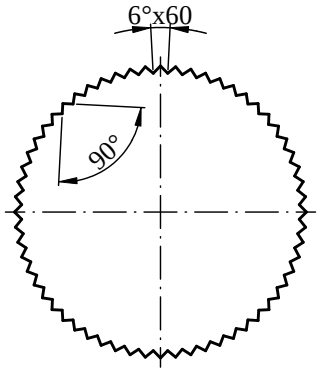


Ø16

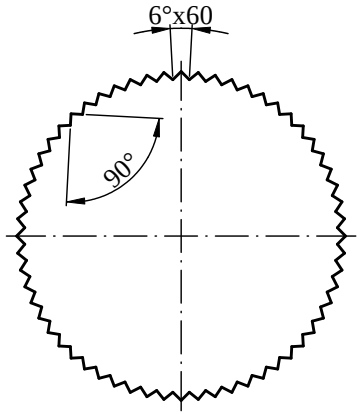


Ø18

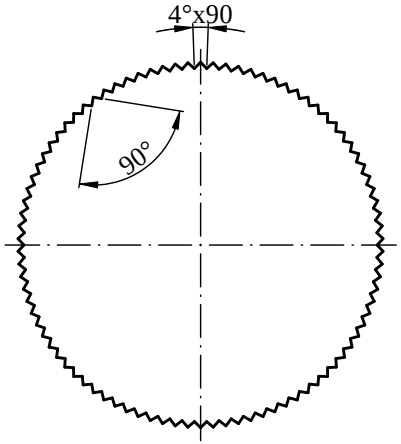


Ø20

| Outside Diameter(D) | Ø14 | Ø14 | Ø16 | Ø16 | Ø16 | Ø18 | Ø18 | Ø18 | Ø20 |
|---|---|---|---|---|---|---|---|---|---|
| Thickness(T) | 1.0 | 2.0 | 1.0 | 2.0 | 2.8 | 1.0 | 2.0 | 2.8 | 2.0 |